STEPS: 1 -7

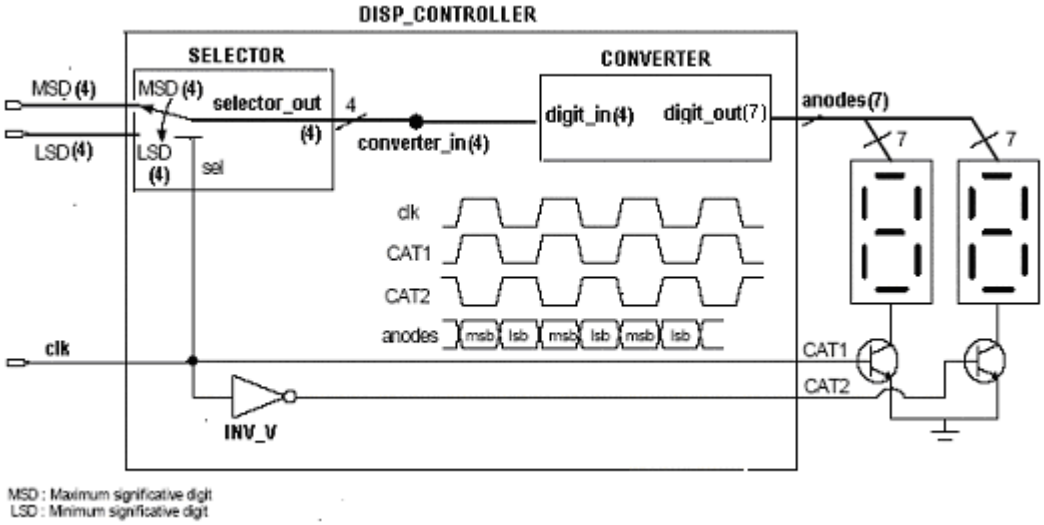

Counter, 0 to F (one of the display shows 0 all the time)

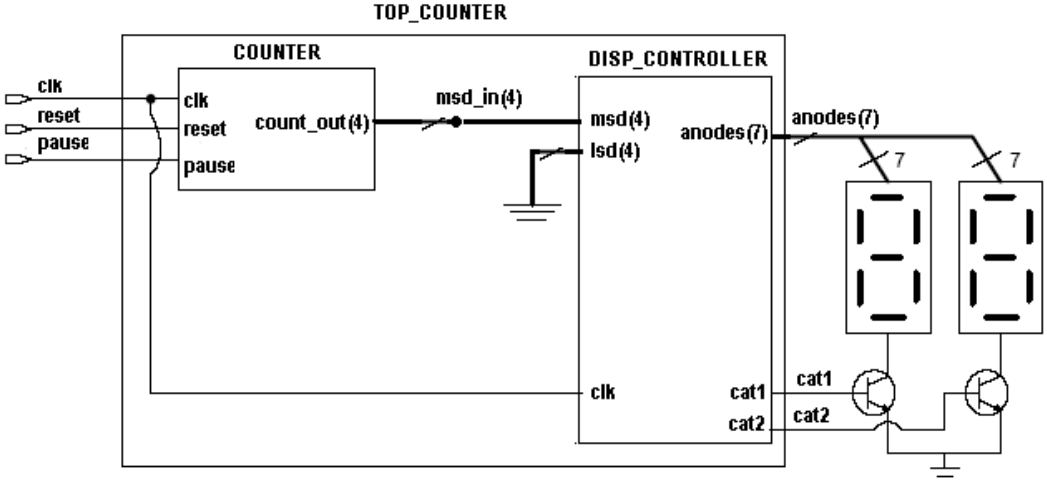
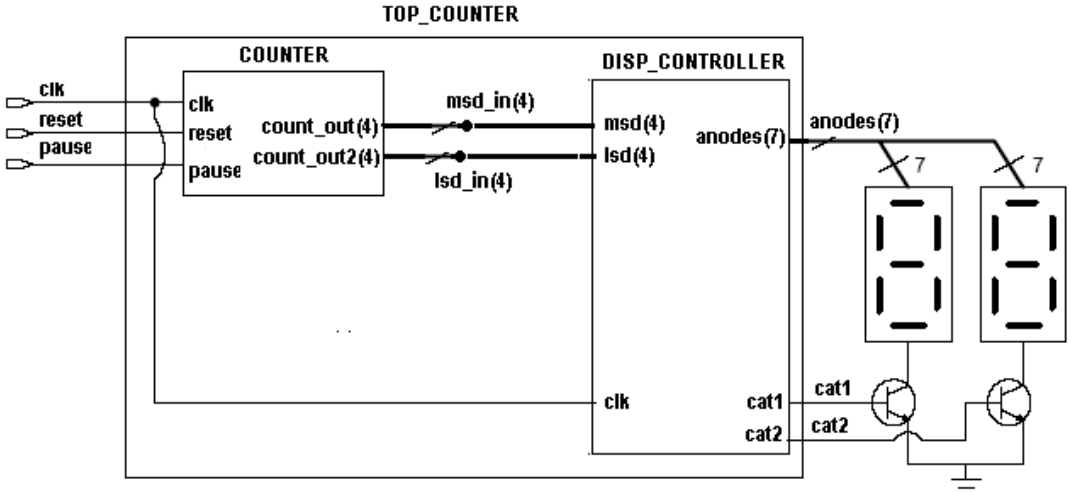
STEPS: 8 –9: Counter, 00 to 99